A

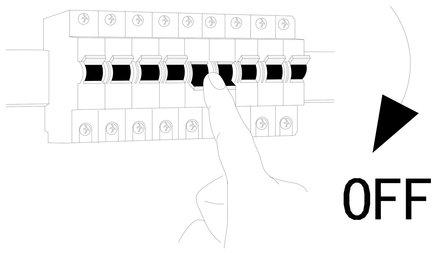

B

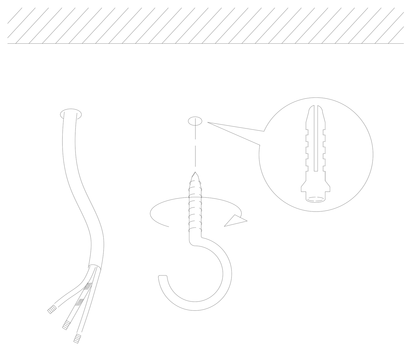

C

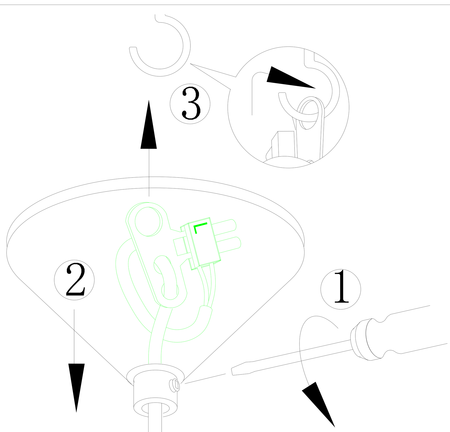

D

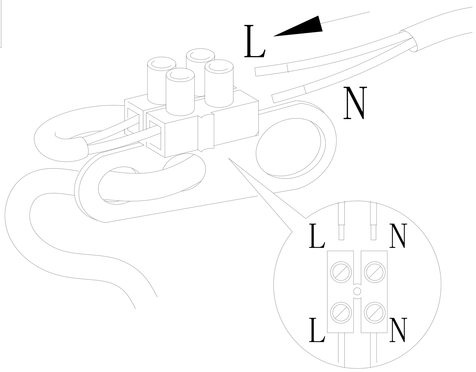

E

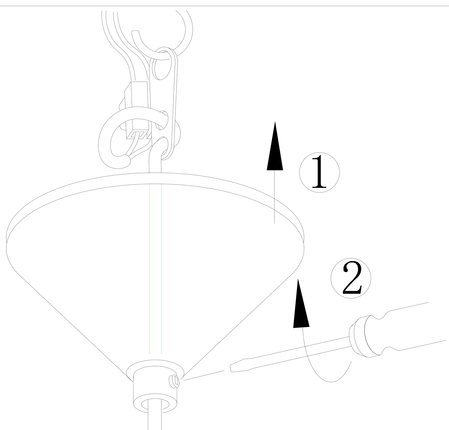

G

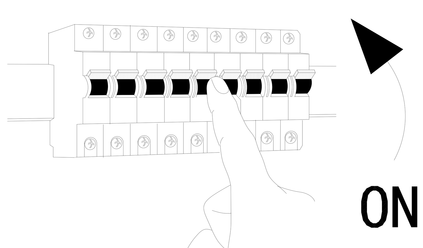

F

BLA88684